# Fixed Pole™

The simplicity in Fixed Pole design is what makes it such a popular product. It has a built in tilt and turn mechanism which allows the cabinet to be accurately aligned to the road, perfect for fit and forget sites.

This product is one of the only poles we design/ manufacture which excludes the requirement for the lowering of equipment to maintenance level.

Currently used by Redspeed International throughout Europe this design is aimed at "fit & forget" camera installations with many hundreds of installations in the London area alone.

## Specification

- Can be produced to any height
- Simple tilt and turn mechanism for easy alignment
- Air conditioning capabilities
- Lower compartment for secure storage of electronics
- High security Mul-T-Lock Cylinder & Key + Euro Shutter Locking System
- Welded mild steel construction
- Hot dip galvanized or Korroprime protection
- Powder coated to any colour within the RAL and BS4800 range
- 15 year anticorrosion warranty
- Manufactured to BS EN ISO9001 standards to ensure quality and reliability
- IK10 impact tested

## Options

- Available in three standard heights 3000mm 3500mm 4000mm
- Additional twin head system
- Custom designed cabinet
- Fixed or tilt and turn cabinet mounting

# Technical Data

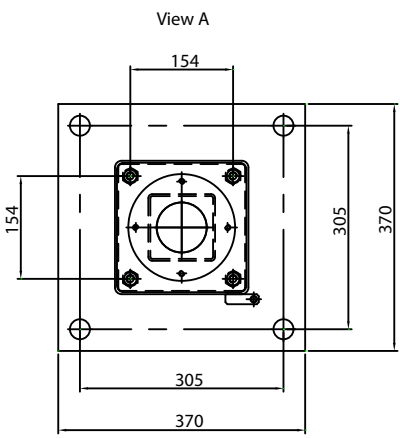


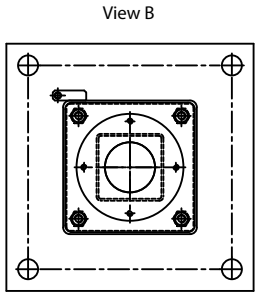


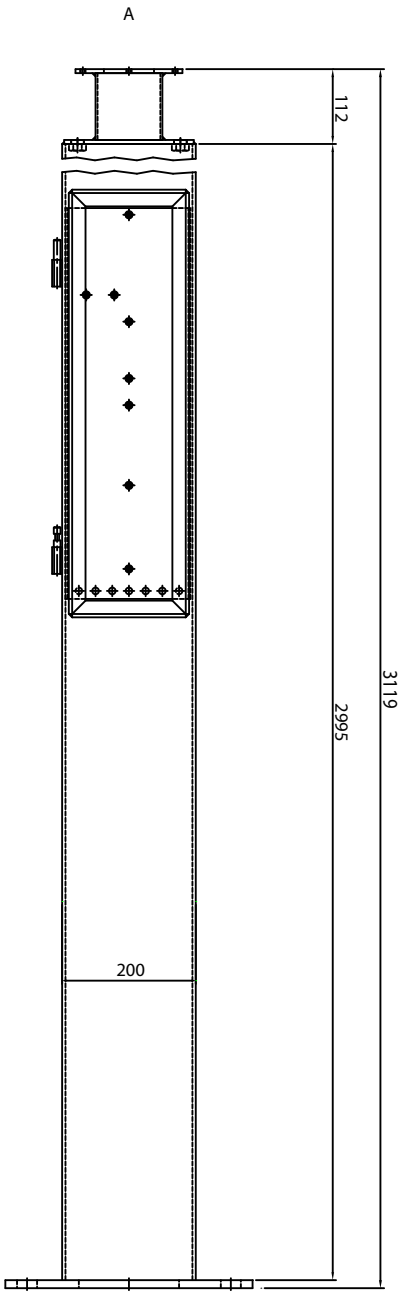


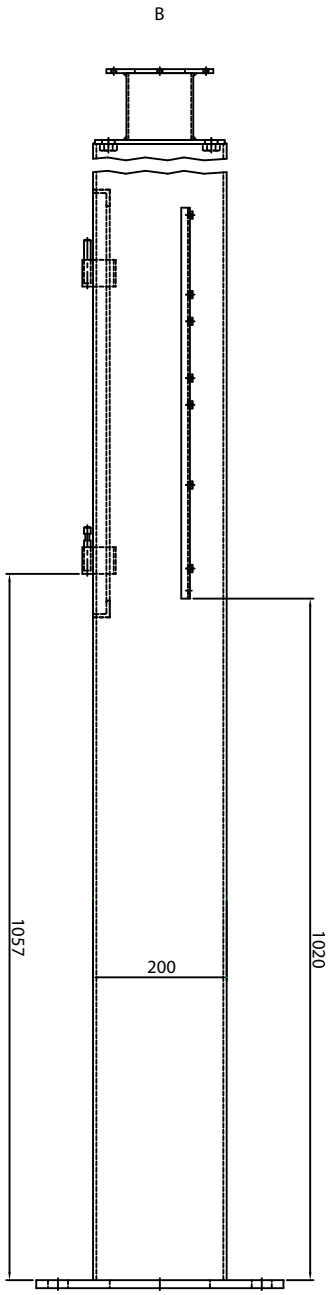


| | | |
|---|---|---|
| **Overall Dimensions** | Fixed Pole | 200(w) x 200(d) x 3000/3500/4000(h) |
| **Weight** | Fixed Pole | Varies |

Pole Body - Welded Construction, main structure consisting of box section BS EN 10219/1 (2006) S275 and formed angle section BS EN 10056 (1999) S275
Welding Conformity; TP27, BSEN 1290; 1998
Mild Steel Specification; BSEN 10025-2:2004 S275
Fixings; 304, 316 S/S
Hot Dip Galvanised Versions to; ISO1461
IK10 tested in accordance with EN 62262
Non Galv Protection Version; Powder Coated Korroprime paint finish from the RAL or BS4800 ranges
The quality assurance system has been approved against the international quality standard ISO 9001 by ASTA BEAB Certification Services under their Certificate No 12689.
Design Protected Crown International 2010